Dimension Drawing

VIS-IPD-OM-12/8
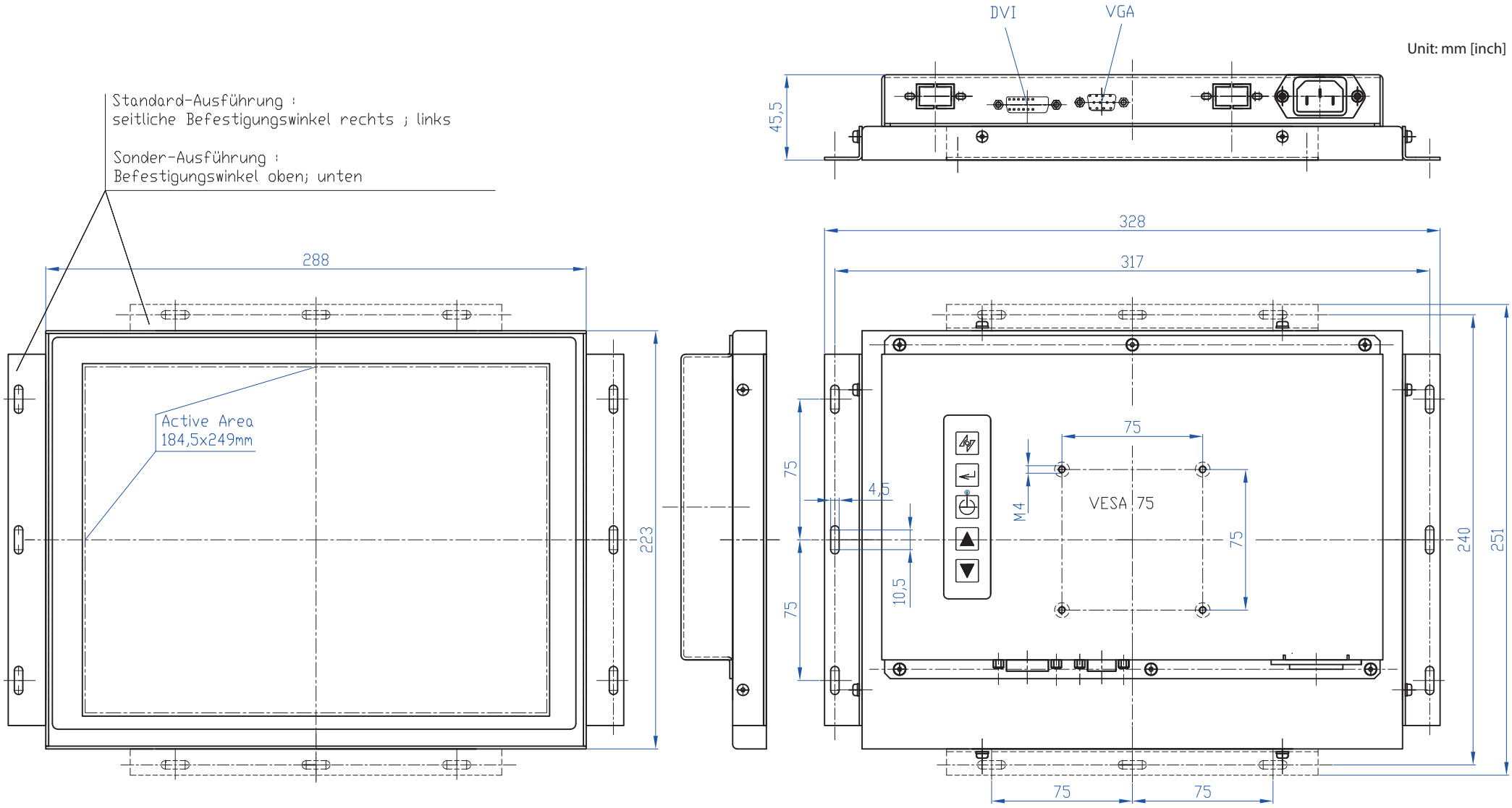
Unit: mm [inch]